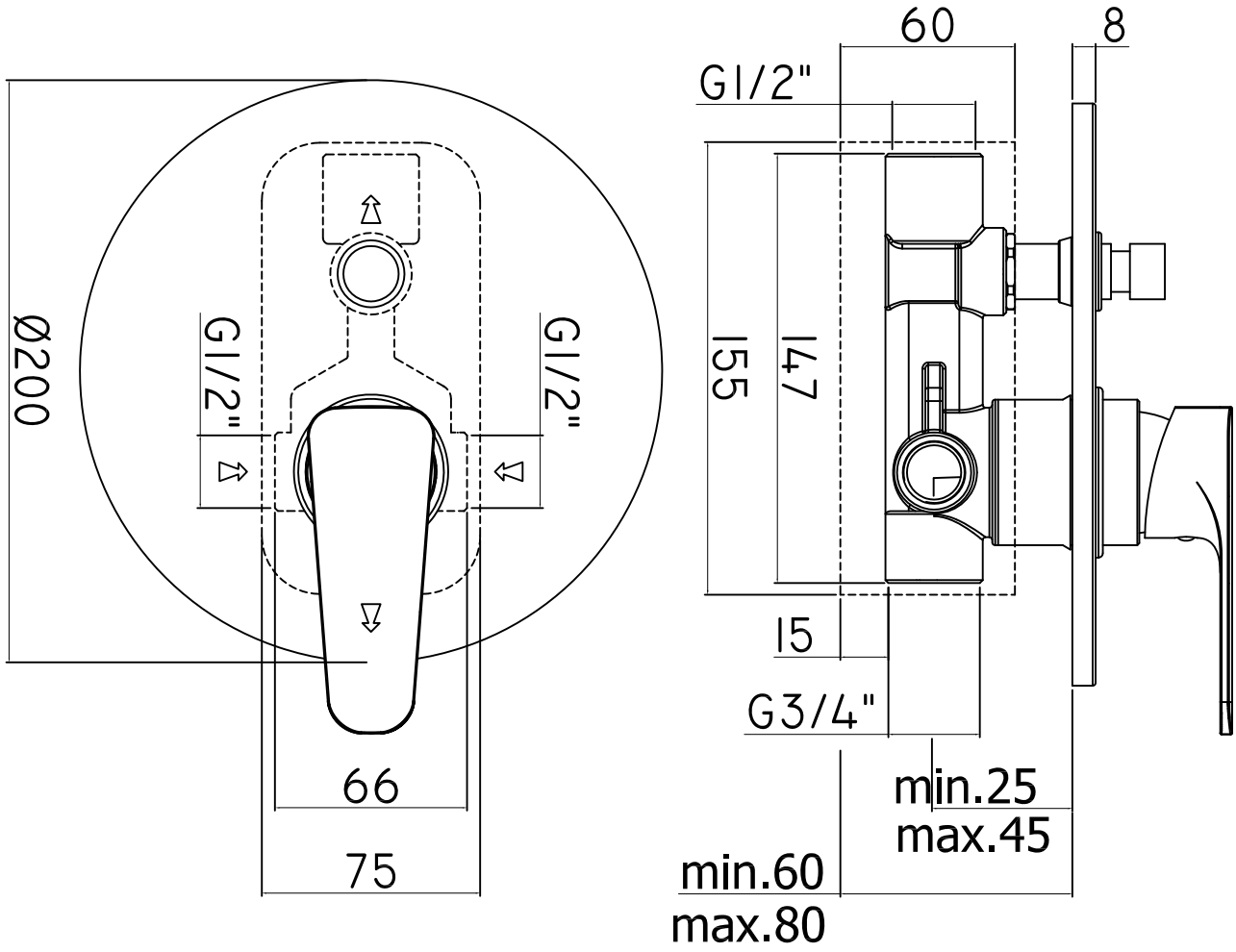
Ø200
G1/2"
G1/2"
66
75
60
8
G1/2"
155
147
15
G3/4"
min.25
max.45
min.60
max.80