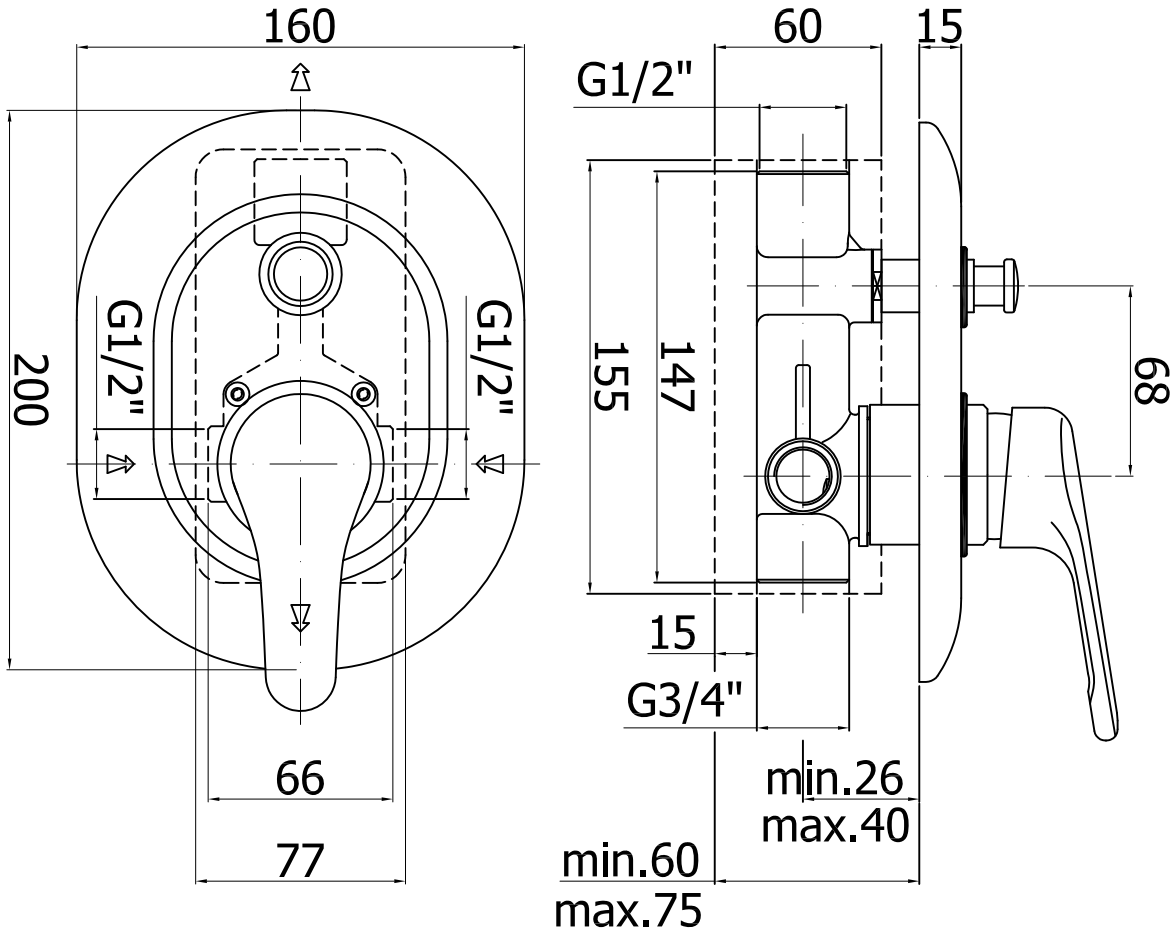
160
200
G1/2"
G1/2"
66
77
60
15
G1/2"
155
147
68
15
G3/4"
min.26
max.40
min.60
max.75