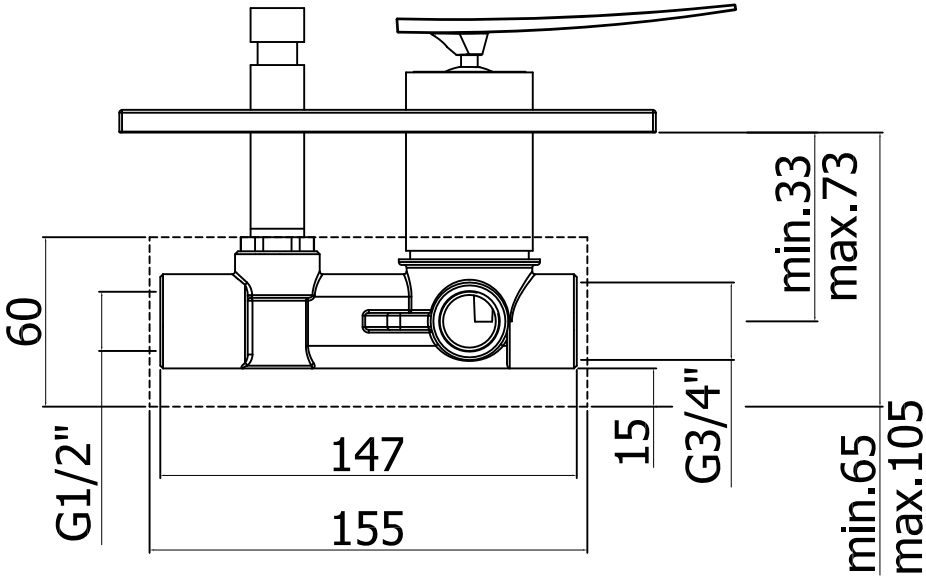
60
G1/2"
147
155
15
G3/4"
min.33
max.73
min.65
max.105

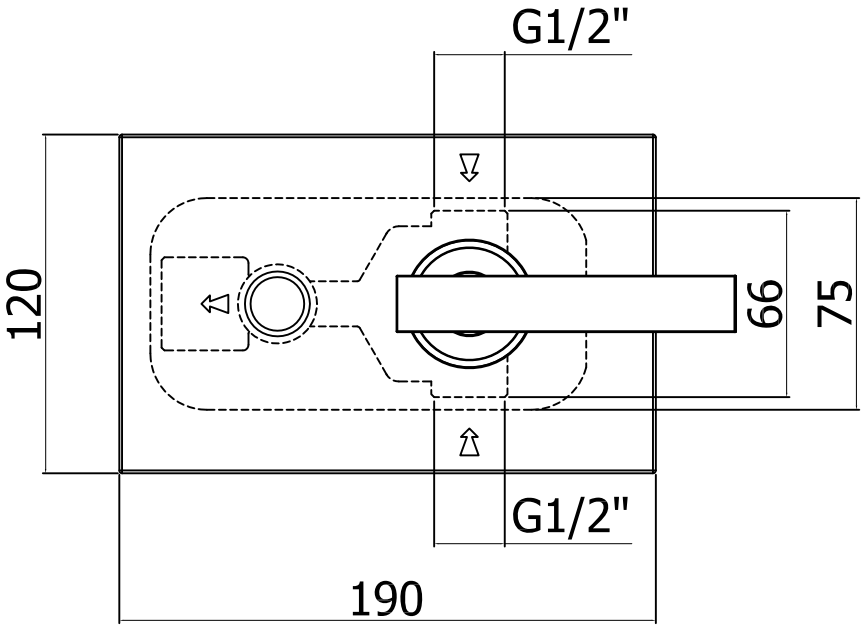
120
G1/2"
190
G1/2"
66
75